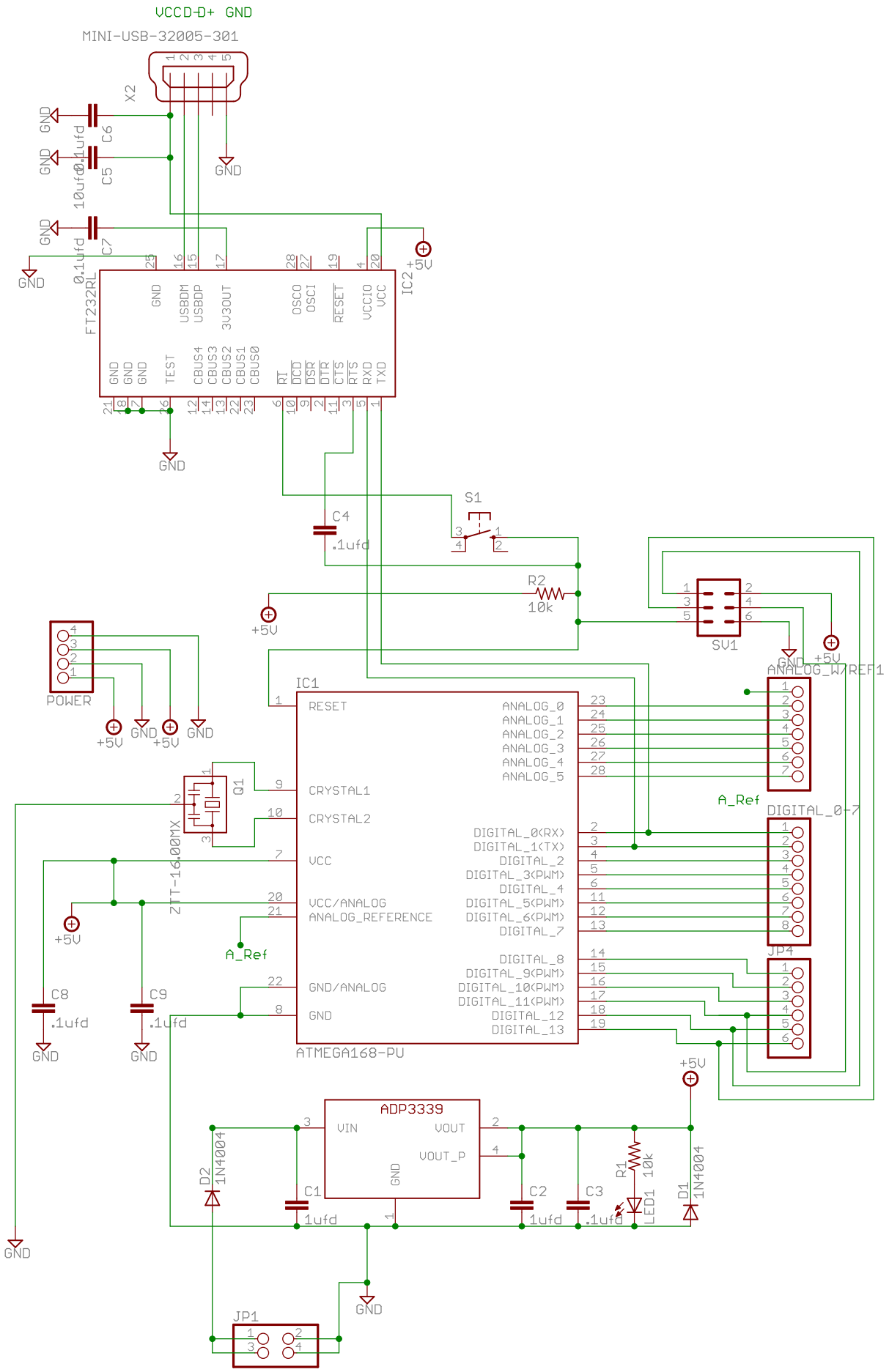

2/18/09 3:14 PM /Users/thecodebenders/Documents/eagle/SeaDuino 1.2/SeaDuino.sch (Sheet: 1/1)